Perfectly clean surfaces in glass production

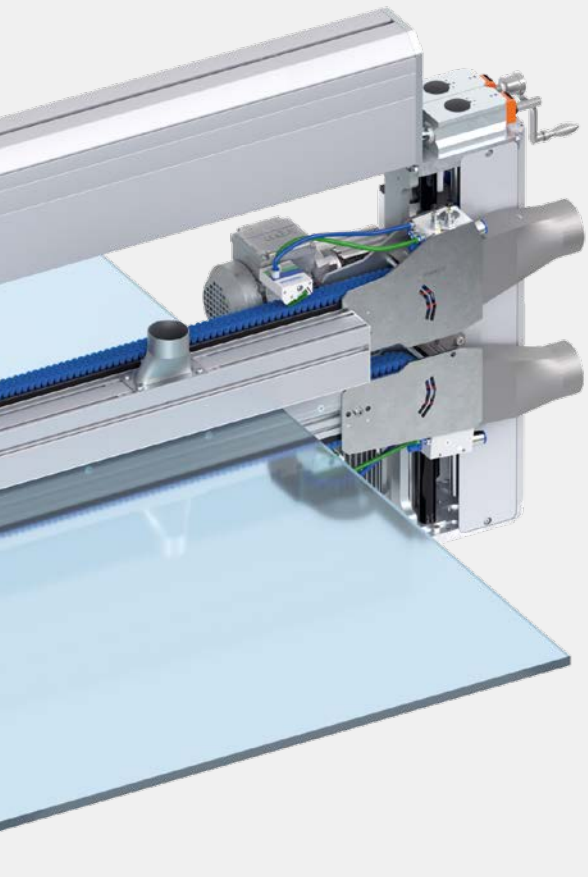

Surface Cleaning Technology

WANDRES
micro-cleaning

Efficient surface cleaning for smooth production processes

Clean surfaces are key to achieving quality excellence and ensuring production processes run efficiently and smoothly. An effective cleaning procedure improves the quality of a surface, reduces the rejection rate and prevents expensive machine downtime. The compact cleaning systems from Wandres can be easily integrated into existing production lines and clean flat glass, solar glass, display glass or automotive glass extremely efficiently. Our cleaning systems are already being deployed throughout the glass industry at multiple stages of the production process in continuous operations.

Our low maintenance cleaning technology effectively removes interleavant powder left clinging to the surface of the glass after destacking. Following wet processes, for instance cutting, grinding or scoring, the robustly engineered Sword Brush Aqua removes the mixture of small glass particles and water while simultaneously pre-drying the surface. Prior to printing or coating, Sword Brushes reliably remove ultrafine particles that would otherwise cause visible flaws during printing. By using the cleaning technology before quality inspection, camera inspection systems will deliver accurate results without false positives.

Play video

After destacking

Removal of interleavant powder reducing the strain on downstream washing machines.

After cutting

Effective removal of glass particles and pre-drying of the surface.

Before printing

Ultrafine particles are effectively removed preventing defects during printing.

Before inspection

Reliable removal of contamination prevents false positives.

Our cleaning machines deliver an impressive performance in 24/7 industrial production with outstanding cleaning results despite remarkably low maintenance and operating costs.

Effective removal of interleaving powder

Glass interleavant is indispensable as it safely separates sheet glass during stacking and prevents the panes from sticking together. After destacking, a large quantity of interleaving powder is left clinging to the surface of the glass. Using washing machines to clean sheet glass means microplastic particles will be released into the water and need to be filtered out of the process water. In addition, blocked filters cause expensive and time-consuming maintenance work as well as recurrent machine downtime. Our low-maintenance cleaning technology reliably removes interleaving powder. Deployed in a pre-cleaning step prior to the glass washer, the technology guarantees stable operations in 24/7 production while significantly reducing the accumulation of microplastics in the wastewater. Depending on the specific application, glass washers may even be dispensed with entirely and replaced by Wandres technology.

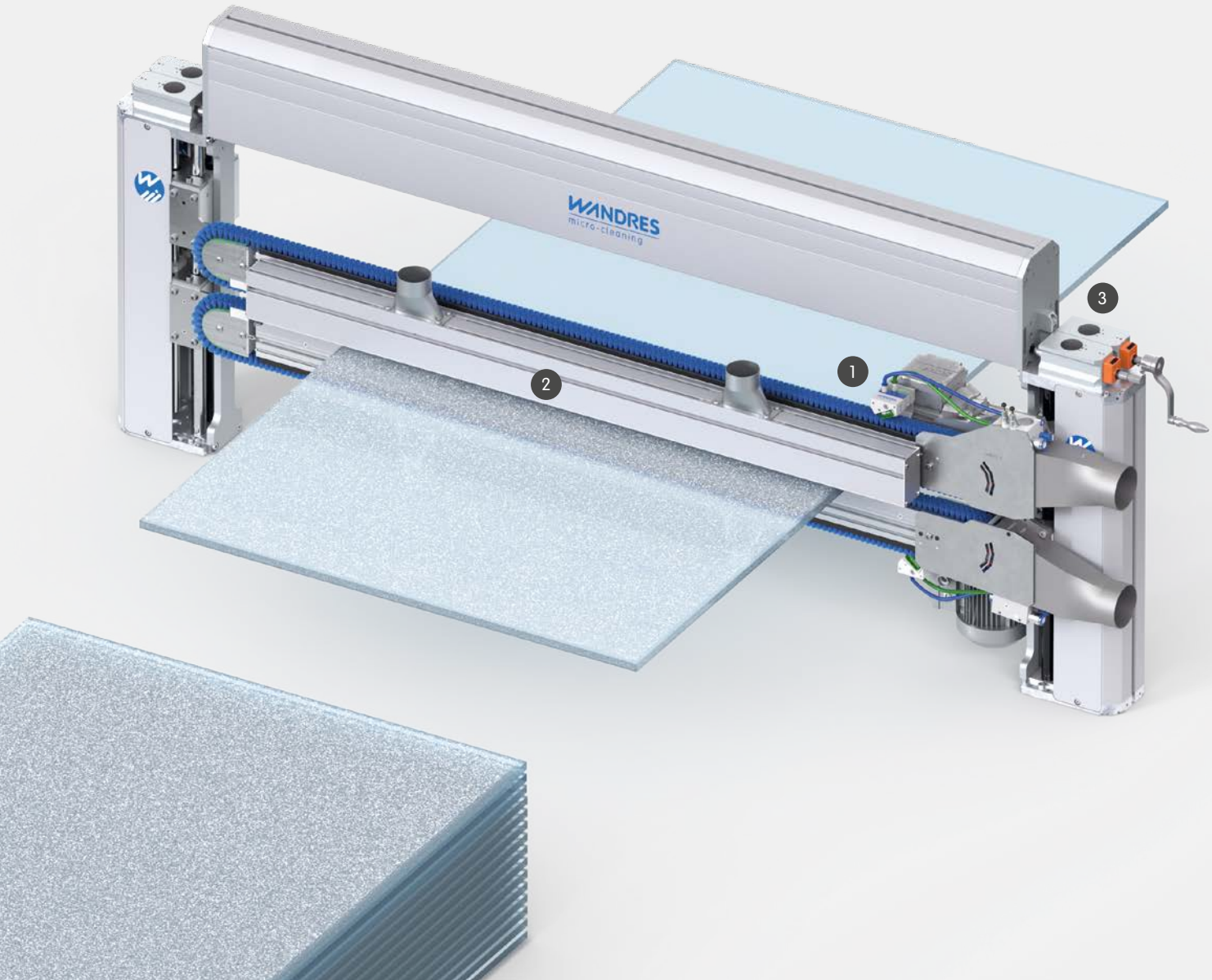

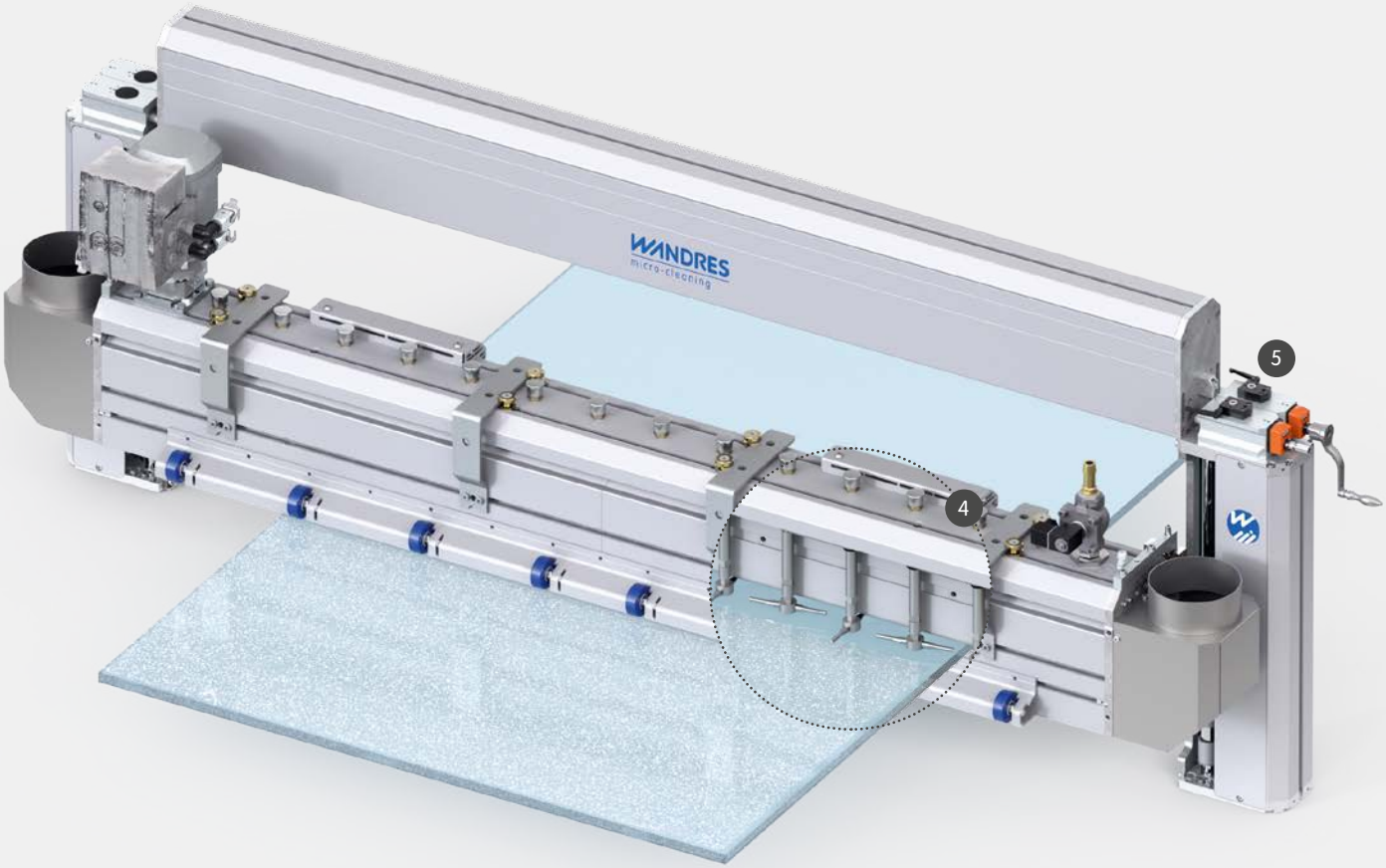

After destacking

The optimal combination

Combi Sword Brush

The Combi Sword Brush Una H-X 121 combined with a pre-cleaning unit that utilises air technology, the Trans-Vac-Unit TKLO 46, minimises the strain on downstream washing processes considerably. In some cases these may even be dispensed with entirely. The suction channel removes large amounts of interleaving powder before two Sword Brushes Type BIX 51 take over, cleaning the surface of the glass gently and extremely efficiently from above and below using micro-moistened filaments with rounded tips.

After destacking

Contactless cleaning

Tornado Channel TKR 200

The Tornado Channel cleans glass surfaces in a contactless cleaning procedure. Rotating Tornado Nozzles located within the channel expel compressed air at several times the speed of sound. Interleaving particles are detached from the surface and immediately propelled towards a suction system.
The circular cleaning areas of the Tornado Nozzles overlap so that the surface of the glass is cleaned seamlessly in a high-performance cleaning action.

1. **Sword Brush BIX 51** with pressure buffer and Ingromat System (2 x for cleaning on both sides)
2. **Trans-Vac-Unit TKLO 46,** high-capacity suction channel for pre-cleaning using air technology
3. **Adjustment unit** for manual, electrical or pneumatic height adjustment
4. **Tornado Channel TKR 200** with rotating Tornado Nozzles
5. **Adjustment unit** for manual, electrical or pneumatic height adjustment

Sword Brush technology for the entire production chain

An effective and gentle cleaning procedure is critical at multiple points in the production chain to avoid disruption to production and to maintain quality excellence. No matter whether deployed in wet processing or in a cleanroom environment, Sword Brushes clean flat or curved glass in a wide range of applications. The cleaning technology not only guarantees process stability in continuous operations but also improves surface quality. Cleaning before printing, coating or camera inspection can achieve a substantial reduction in the reject rate. An effective cleaning process improves productivity after CNC machining, following drilling, scoring and breaking and after polishing or bevelling.

After cutting

Cleaning in wet processing

Sword Brush Aqua BLD 52

Made entirely of stainless steel and featuring an encapsulated motor, the corrosion-resistant Sword Brush Aqua is robust and low-maintenance. It cleans wet glass surfaces, for instance after cutting, breakout or grinding. The mixture of glass chips, particles and water is gently removed while at the same time the process has a pre-drying effect on the surface.

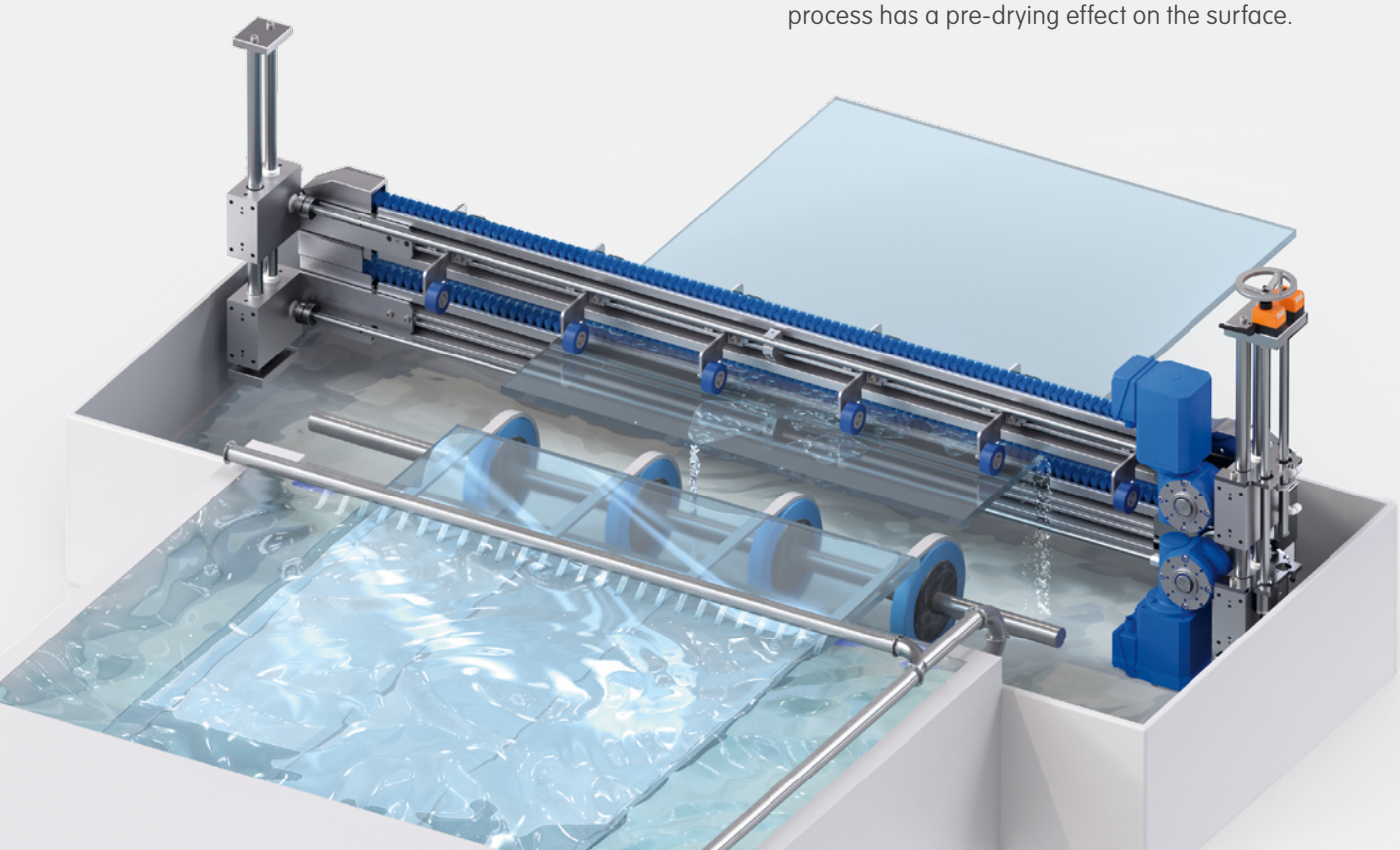

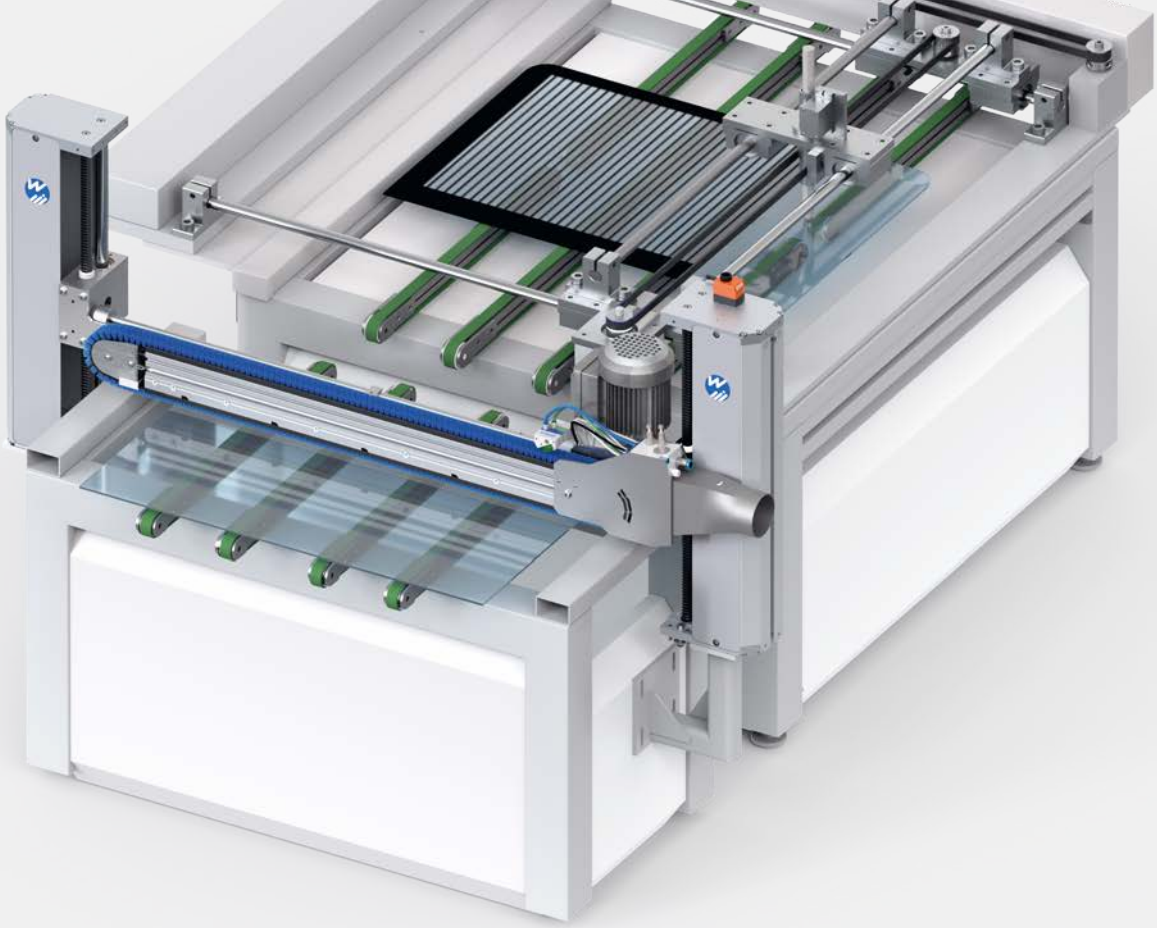

Before printing

A flawless print image

Combi Sword Brush Una X

The Combi Sword Brush Una X 111 uses micro-moistened filaments to remove even ultrafine particles that would otherwise cause defects during the printing process. The Ingromat® cleaning agent reduces the electrostatic charge. The surface of the glass remains dry and can proceed to glass-printing applications immediately after cleaning.

Before inspection

Avoiding false positives

Combi Sword Brush Una GV

The Combi Sword Brush Una GV adapts perfectly to the curvature of glass surfaces, for instance automotive glass. Curved windscreens or rear and side windows are cleaned reliably before camera inspection. Particle-related false positives are thereby avoided and the reject rate reduced significantly.

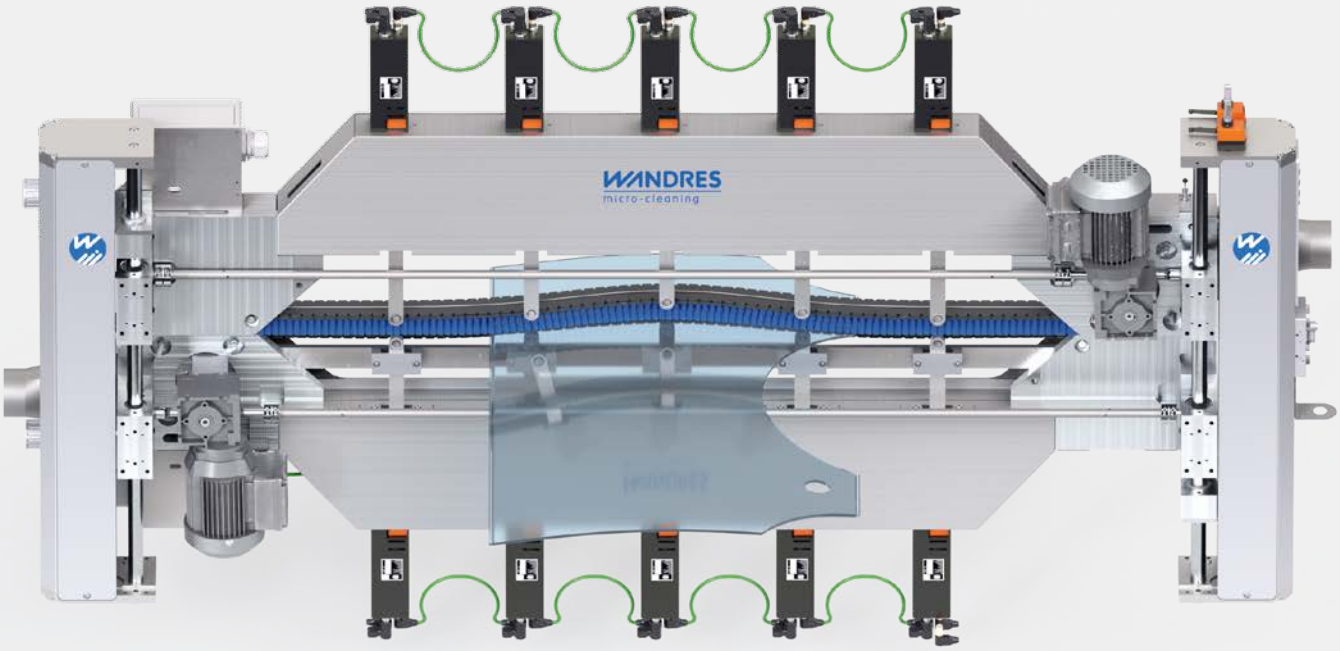

Innovative cleaning technology for continuous operations in production

Sword Brushes always wipe crosswise to the direction of travel of the surface being cleaned. Implementing the **Ingromat® Method,** the filament tips of the circulating linear brush are micro-moistened. Forces of adhesion bind particles to the brush filaments. The particles are detached from the brush in a self-cleaning unit and disposed of by vacuum extraction. The linear brushes are flexibly mounted on a **pressure buffer** regulated by compressed air. The pressure buffer ensures a constant wiping force and the best possible cleaning results.
The **linear brushes** are manufactured to the highest quality standards by our sister company Wandres Brush-Hitec in the Black Forest and have an ultralong service life. The brushes can be engineered in a highly specialised process with rounded filament tips and a **Soft Touch** feature for particularly scratch sensitive materials. The rounded filament tips are designed to clean delicate glass surfaces gently but extremely effectively.

Combi Sword Brushes have a modular design and are individually engineered to clean surfaces from either one or both sides according to the specific cleaning requirements. Up to four cleaning modules can be mounted on one height adjustment unit. Depending on the demands of the individual application, the impact of the Sword Brushes can be enhanced by the use of contactless air technology. To deal with high levels of contamination, a suction channel can be installed at the infeed to the Sword Brush to perform an efficient pre-cleaning process using air technology.
The **Tornado Channel** also delivers high-performance cleaning results operating as a stand-alone unit thanks to the innovative air technology. **Tornado Nozzles** rotate at high velocity. The arms of the rotating nozzles interlock precisely like finely-tuned cogwheels. The circular cleaning areas overlap and the surface of the product is cleaned seamlessly. The nozzles expel compressed air at several times the speed of sound, powerfully removing particles and dust from the surface.

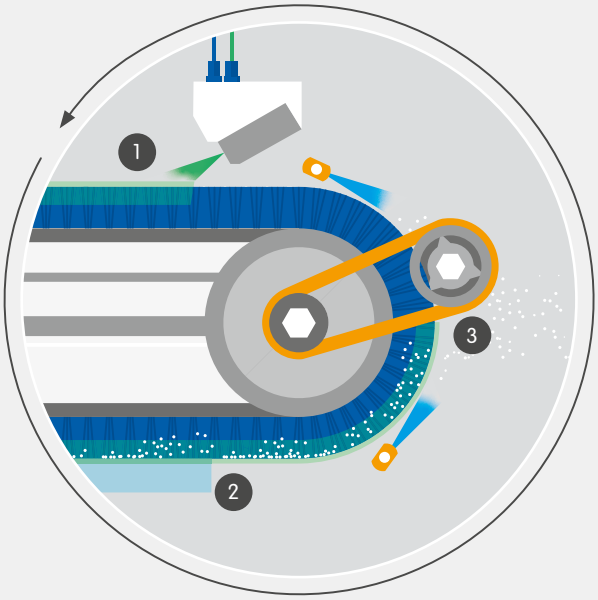

1. Micro-moistening

The Ingromat® sprayer applies a thin film of Ingromat® antistatic cleaning liquid onto the filament tips.

2. Cleaning of the surface

Particles are bound to the micro-moistened filaments of the circulating linear brush and propelled towards a suction system.

3. Self-cleaning

A rotating rack and compressed air nozzles detach particles from the filaments. They are removed by vacuum extraction and disposed of safely.

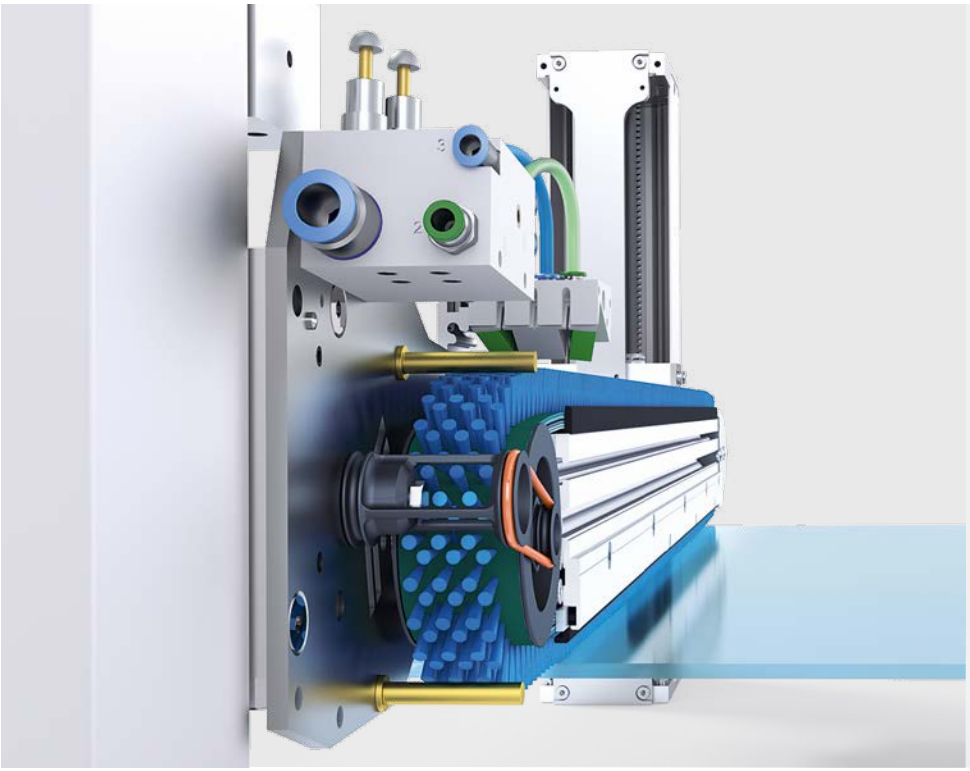

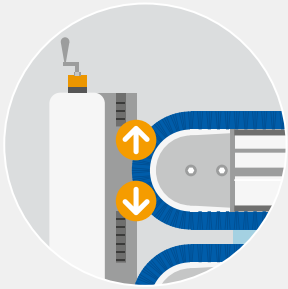

Height adjustment unit

The height of the cleaning modules can be adjusted to accommodate variations in the thickness of the material.

Pressure buffer

The pneumatically regulated pressure buffer compensates for uneven surfaces thereby guaranteeing the optimal wiping force.

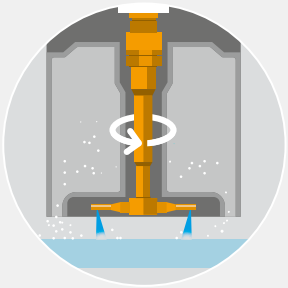

Tornado Channel

Rotating Tornado Nozzles expel compressed air, powerfully dislodging particles from the surface.

A perfect surface reflects our image

We specialise in the development and manufacturing of cleaning systems for continuous operations in industrial production. Our client base is large and diverse as we operate across multiple sectors worldwide ranging from the furniture and packaging industry to the automotive and electronics sector and the glass, paper and printing industry. We collaborate with an international network of sales and service partners and have subsidiary companies in the USA and China. A team of over 140 employees develop, produce and market our innovative cleaning machines at our production site which is located close to the city of Freiburg im Breisgau at the foot of the Black Forest. More than 80 % of the components for our machines are produced in-house here using cutting-edge machinery and technology. In-house production safeguards the long-term availability of replacement parts and guarantees flexibility. Insourcing also ensures the stringent quality standards of our cleaning systems are maintained. In an ever-changing world, we are constantly striving to find the best possible solutions to meet the cleaning demands of industrial production.

1981

Wandres GmbH micro-cleaning was originally founded by Claus G. Wandres as an engineering business.

140 +

Employees in the Southern Black Forest develop, produce and market the Wandres cleaning systems.

> 80 %

In-house manufacturing of parts offers flexibility and control. Insourcing secures short lead times and safeguards high quality standards.

< 20 µm

The diameter of fine dust particles captured — by comparison, only one third the width of a human hair! Sword Brushes reliably remove even the very finest particles of dust.

> 55 %

Rate of direct exports proves that Sword Brushes are in action globally.

43

Countries worldwide are home to our sales and service partners.

For the past 40 years we have been developing and manufacturing cleaning systems for industrial production. The continuous improvement of our products is a priority at Wandres.

Wandres GmbH micro-cleaning · Im Gewerbepark 8 · 79252 Stegen, Germany
Phone +49 7661 9330-0 · sales@wandres.com · www.wandres.com

BRGlas_001_EN_20220901 | WMC