Cevomat™ CVOC 17..

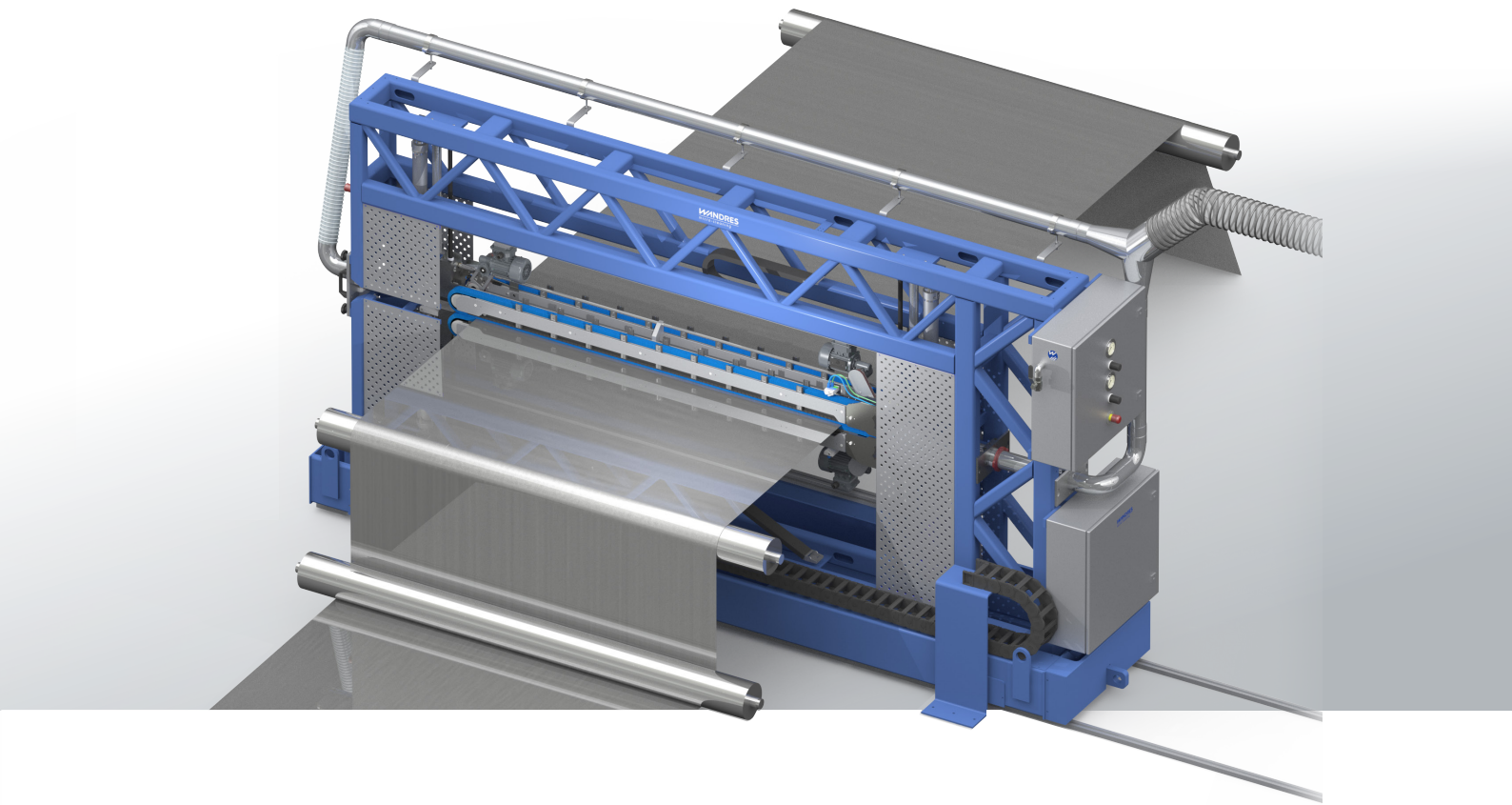

Brief description

The Cevomat™ CVOC 17.. machine has been designed for the double-sided cleaning of steel, stainless steel, aluminium and non-ferrous metal coils. Metal coils may be cleaned before rolling, before levelling and before or after galvanising. The Cevomat cleans metal strips with both dry and oil-based lube, switching back and forth as required.

Technical details

- 4 x Sword Brushes CVO 51..with flexible pressure buffer
- Ingromat® system system for the self-cleaning of the brushes including oil filters. Optional heating / cyclone to separate hot melts.
- 2 x horizontal collective suction connections
- 1 x adjustment frame VEG 40 with pneumatic quick adjustment HVP that serves as a Crash Protection. A laser light barrier is available as an option.
- 1 x robust protective frame with guide plates
- 1 x control and pneumatic cabinet
- Option: Base frame or driven chassis

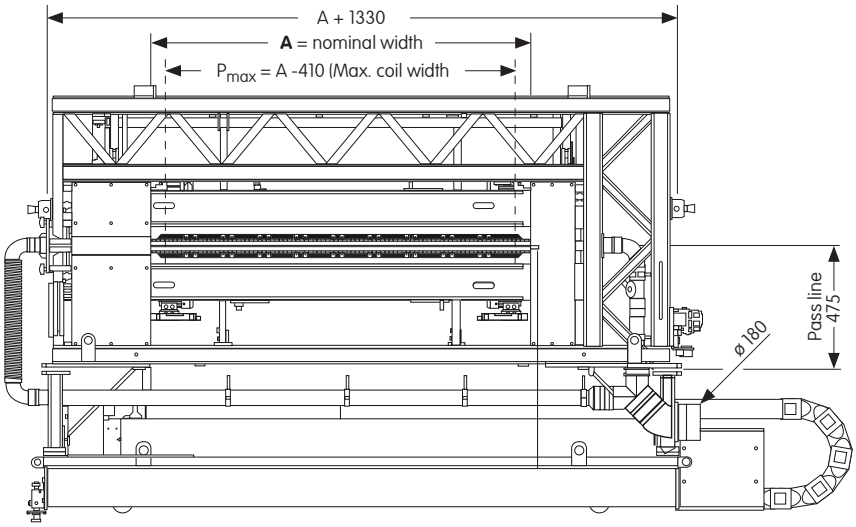

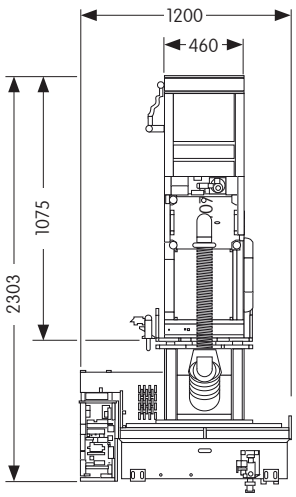

Values in mm

Order no.

CVOC 17/460/A

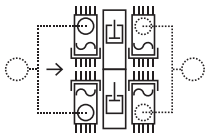

053 -	Nominal width A in mm	Nominal width A in inches	
-009	1300	51.18	
-010	1500	59.06	
-011	1650	64.96	
-012	1750	68.90	
-013	2000	78.74	
-014	2200	86.61	
-015	2500	98.43	
-016	2750	108.27	
-017	3000	118.11	
-018	3200	125.98	
-019	3500	137.80	

Ordering example

The subject metal web
has a max. width of P_{max} = 2200 mm.
P_{max} + 410 mm = 2610 mm
Nominal width of the Cevomat should
therefore be A = 2750 mm.
Order no. 053-016
describes CVOC 17/460/2750

Explanation

A	Nominal width = centre distance between deviation rollers of linear brushes.
P_{max}	maximum width of subject web P_{max} = A – 410 mm
PL	Pass line = working height Distance between screw down area and lower web surface = 475 mm (standard, without chassis) other dimensions on request
T	Depth in transport direction = 460 mm

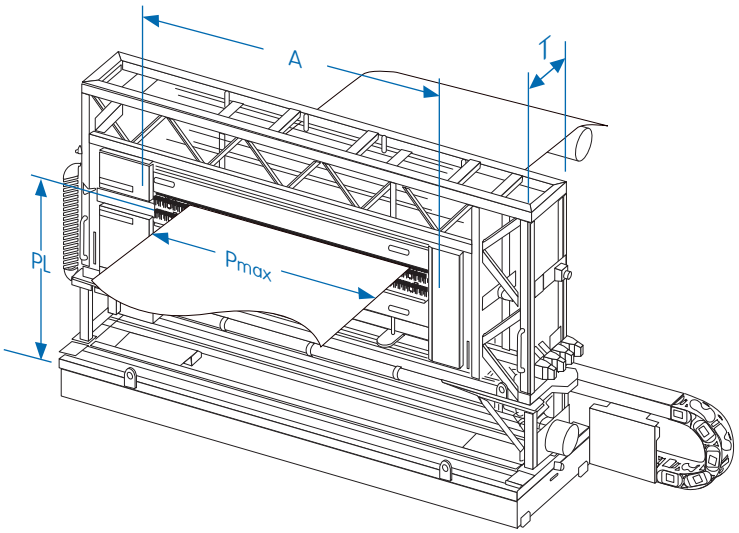

Lifting of brushes

Sword Brushes at the infeed and the outfeed of the machine wipe in opposite directions. Thus wiping forces cancel each other. To protect the brush filaments, brushes are lifted somewhat at the material's edges. They start touching the surface only after having passed these edges. The above-mentioned wiping configuration ensures that the entire product surface is cleaned nonetheless.

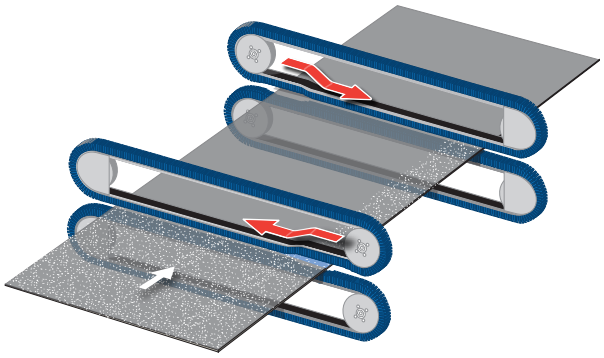

CVOC 17..

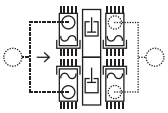

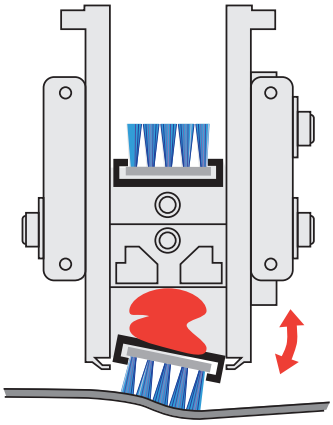

Flexible pressure buffer

The linear brushes are mounted on flexible pressure buffers. These buffers compensate material thickness variations and provide for a consistent wiping pressure even with wavy webs. Furthermore, the linear brushes are guided in a parallel way. This type of guide keeps the linear brushes in place so that they cannot tilt in transport direction if the webs move at high speed. Brush filaments will always be in a vertical position in relation to the material surface and will thus yield premium cleaning results.

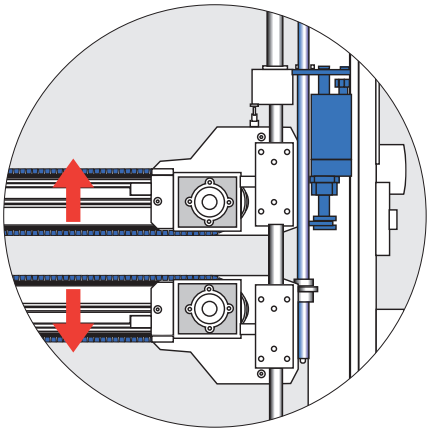

Crash Protection

In crash situations, a pneumatic quick-adjustment rapidly removes the Sword Brushes from the web. Joints and faulty areas at the beginning or at the end of a web may pass the Cevomat™ without any problems. The pneumatic stroke feature allows a quick exchange of webs. Normally, there is a 100 mm upper and lower stroke. Other strokes are available on request.
A chassis is available as an option allowing the entire cleaning module to be removed from the production line during continuous process operations.

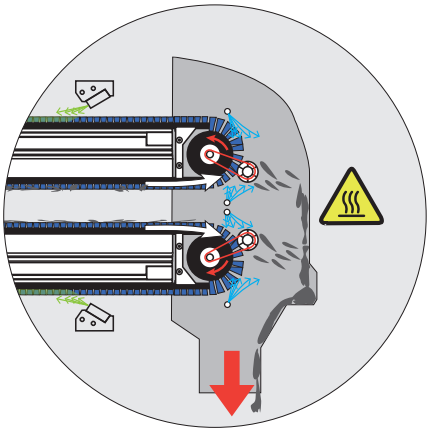

Self-cleaning mechanism

The Sword Brushes have a self-cleaning unit. At this unit, rotating racks and compressed air nozzles permanently clean the linear brushes both mechanically and pneumatically. In certain intervals, the brush filaments are micro-moistened and regenerated with the cleaning agent Ingromat®.
Heating elements for the brush filaments and for the walls of the self-cleaning unit are available as an option. They liquify pasty lubricants (hot melts) making them flowable. The self-cleaning unit will detach the mixture of particles and lubricants from the filaments. It will flow into a cyclone and will be separated within a collecting tray. Customers may switch between dry lube aluminium webs and oily steel webs. These materials may be cleaned continuously without time-consuming switching operations.

Technical data

CVOC 17..

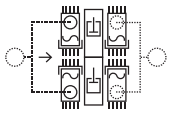

Electrical details	
Sword Brush drive motor	2 x 0.25 kW SEW motor, IP 54, UL-compatible 50 Hz; △ 220 - 240 V; 1.14 A; ⅄ 380 - 415 V; 0.66 A 60 Hz; △ 240 - 266 V; 1.03 A; ⅄ 415 - 480 V; 0.6 A
Main valve Sword Brushes	2/2 directional valve: 1 x 24 V DC; 1.5 W
Electrical height adjustment (HVE)	24 V DC; 160 W; control via PLC
Pneumatic quick adjustment (HVP)	5/3 directional valve: 2 x 24 V DC; 1.08 W
Pneumatic details	
Compressed air quality	filtered (particle size < 40µm), oil free (residual oil < 1.5 mg/m³ at 24° C)
Compressed air connection	1 x 1/2" female thread; 6 bar
Compressed air consumption	930 l/min (with standard self-cleaning nozzles) 1130 l/min. (with reinforced self-cleaning nozzles)
Fluidics (option)	
Ingromat® hose connection	1 x Ø 8 mm
Ingromat® consumption	4 x 0.2 - 0.8 l/h
Suction	
Suction connection	2 x Ø 125 mm
Suction volume	2 x 21 m³/min
Operating parameters	min. -500 Pa vacuum; min. 28 m/s (measured at suction connection)
Acoustic emission	
	approx. 80 dB (A) depends on surface features and the geometry of the subject coil.
Linear brush	
Linear brush type	Quadro R6
Filament material	Polyamide 6.12
Filament length	17 mm
Filament-Ø	0.127 mm (standard), option: 0.15 mm; 0.2 mm

Technical data are subject to change

Germany
Wandres GmbH micro-cleaning
Im Gewerbepark 8
D-79252 Stegen
Tel. + 49 (0)7661-9330-0
sales@wandres.com
www.wandres.com

USA
Wandres Corporation
719 W. Ellsworth Rd., Suite 7
USA-Ann Arbor, MI 48108
Tel. +1-734-214-9903
sales@wandresusa.com

China
万喆清洁设备（上海）有限公司
Wandres Cleaning Machinery (Shanghai) Co., Ltd.
755B, Tower 3, No. 88 Keyuan Road
Pudong, Shanghai, China 201203
Tel. + 8621 68520069
china@wandres.com

WANDRES
micro-cleaning